VERSION A

1. Short Answer Problems (5 points each)

   (a) (5 points) A wire carries current I flowing into the page. Draw the magnetic field lines generated by the current.

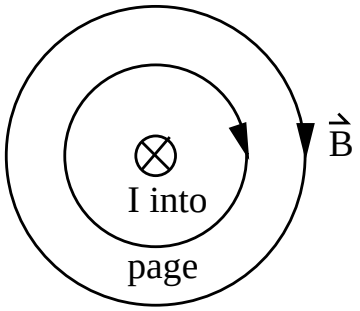

   (b) (5 points) A uniform electric field $E = 3000$ Volts/meter exists within a certain region. What volume Ω of space contains an energy U_E equal to 1.0 $\times 10^{-7}$ J? Express your answer in cubic meters.

   Answer: The energy density u_E is given by

$$u_E = \frac{U_E}{\Omega} = \frac{1}{2}\varepsilon_o E^2 \tag{1}$$

$$\begin{aligned} \Omega &= \frac{U_E}{\frac{1}{2}\varepsilon_o E^2} \\ &= \frac{1.0 \times 10^{-7}\ \text{J}}{\frac{1}{2}\left(8.854 \times 10^{-12}\ \text{C}^2/\text{Nm}^2\right)\left(3000\ \text{V/m}\right)^2} \\ &= 2.51 \times 10^{-3}\ \text{m}^3 \end{aligned}$$

$\Omega = 2.51 \times 10^{-3}\ \text{m}^3$

(c) (5 points) A series of equipotential surfaces are shown. Which way would a positive charge go if released from point A? Explain.

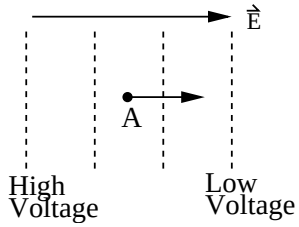

Answer: A positive charge goes from high voltage to low voltage. So the positive charge would go to the right. Another way to see this is to note that the electric field $\vec{E} = -\nabla V$ points to the right.

(d) (5 points) Charge on an originally uncharged isolated conductor is separated by holding a positively charged glass rod very closely nearby. Assume that the induced negative charge on the conductor is equal to the positive charge q on the rod. Which Gaussian surface has zero net flux?

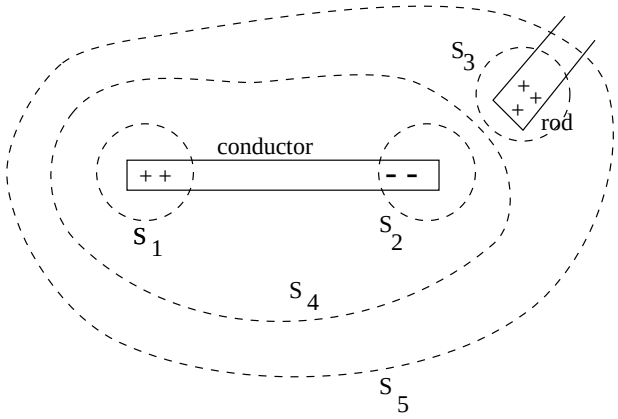

i. S_1
ii. S_2
iii. S_3
iv. S_4
v. S_5

Answer: iv. S_4

2. Short Answer Problems II (5 points each)

(a) (5 points) You are given two identical inductors, each with inductance L. In order to maximize their equivalent inductance, you should arrange them

i. in series
ii. in parallel
iii. The inductance is not affected by the arrangement.
iv. None of the above.
v. Not enough information given.

Explain your answer.

Answer: i. in series

Explanation: In series the equivalent inductance $L_{eq} = L + L = 2L$. In parallel

$$\begin{aligned} \frac{1}{L_{eq}} &= \frac{1}{L} + \frac{1}{L} = \frac{2}{L} \\ L_{eq} &= \frac{L}{2} \end{aligned}$$

So L_{eq} is larger in series.

(b) (5 points) Below are shown 2 cross sections of airplane wing designs. Which would provide more lift and be a better design of an airplane wing? Explain your answer.

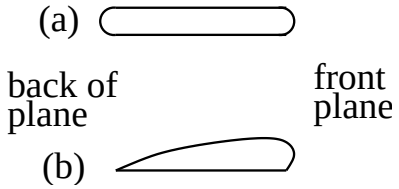

Answer: From Bernoulli's principle, higher velocity fluids exert less pressure. Since air going over the top of the wing has further to go but the same amount of time to go to the back edge as air going under the wing, the air going over the top has higher velocity and exerts less pressure than air below the wing, giving the wing lift.

b

(c) (5 points) You have two rods of the same length and diameter, but they are made of different materials. The rods will be used to conect two regions of different temperature such that energy will transfer through the rods by heat. They can be connected in series or in parallel as shown in the figure. In which case is the rate of energy transfer by heat larger? Explain.

i. It is larger when the rods are in series.
ii. It is larger when the rods are in parallel.
iii. The rate is the same.

Answer: ii. It is larger when the rods are in parallel. The rate of heat transfer

$$P = \kappa A \left| \frac{dT}{dx} \right| \sim \kappa A \frac{\Delta T}{L} \sim \frac{A}{L} \tag{2}$$

When rods are in parallel, the area A is larger and the length L is shorter, so the rate of energy transfer is larger.

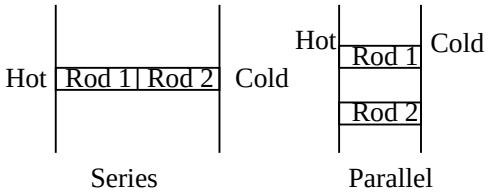

(d) (5 points) A positively–charged particle moves along the x–axis with known velocity $\vec{v}_i$ and enters a region of constant uniform field which extends for a distance L in the x–direction. The particle is deflected in the x–y plane as shown below and leaves the region with a new velocity vector $\vec{v}_f$.

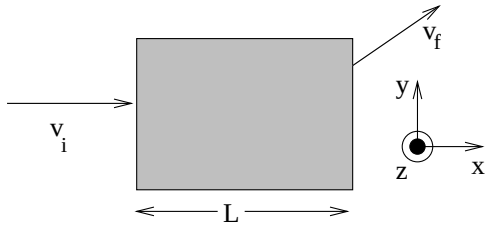

What is the direction of the field if it is a pure magnetic field aligned along one of the coordinate axes?

i. $-x$
ii. $+x$
iii. $-y$
iv. $+y$
v. $-z$
vi. $+z$

Answer: From the Lorentz force law $\vec{F} = q\vec{v} \times \vec{B}$, the answer is $-z$.

3. Short Answer Problems III (5 points each)

(a) A nuclear fusion reaction will occur in a monatomic gas of deuterium nuclei when the nuclei have an average kinetic energy of at least 0.75 MeV. What is the temperature T required for nuclear fusion to occur with deuterium? (1 MeV = 10^6 eV and 1 eV = 1.6×10^{-19} J)

Answer: From the kinetic theory of gases, the average kinetic energy is proportional to the temperature.

$$\begin{aligned} \overline{\frac{1}{2}mv^2} &= \frac{3}{2}k_B T \\ T &= \frac{2}{3}\frac{\overline{m}v^2}{k_B} \\ &= \frac{2}{3}\frac{(0.75 \text{ MeV})}{(1.38 \times 10^{-23} \text{ J/K})}\frac{(10^6) \text{ eV})}{(1 \text{ MeV})}\frac{(1.6 \times 10^{-19} \text{ J})}{(1 \text{ eV})} \\ &= 5.80 \times 10^9 \text{ K} \end{aligned}$$

$T = 5.80 \times 10^9$ K

(b) (5 points) An air bubble released at the bottom of a pond expands to 4 times its original volume V_0 by the time it reaches the surface. If atmospheric pressure is 100 kPa, what is the absolute pressure P_0 at the bottom of the pond in kPa? Assume constant temperature T.

Answer: From the ideal gas law $PV = nRT$, at constant temperature

$$\begin{aligned} P_0 V_0 &= P_1 V_1 \\ P_0 &= \left(\frac{V_1}{V_0}\right) P_1 \\ &= 4P_1 \\ &= 400 \text{ kPa} \end{aligned}$$

$P_0 = 400$ kPa

(c) A hollow conducting metal sphere of radius 0.5 m is charged to a potential of +400 V with respect to infinity. What is the electric potential V *inside* the sphere at a distance $r = 0.25$ m from the center of the sphere? Explain your reasoning.

Answer: +400 V. The conducting sphere is an equipotential. That means that the potential inside is the same as the potential on the surface. The charge on the surface has rearranged itself in such a way that $E = 0$ inside the sphere. The potential difference ΔV between two points inside the sphere or between a point inside the sphere and a point on the surface is given by

$$\Delta V = -\int \vec{E} \cdot d\vec{s} = 0 \tag{3}$$

because $E = 0$ inside the sphere. (On the outside surface, $\vec{E}$ points radially perpendicular to the surface of the sphere.)

$V = +400$ V

(d) (5 points) What is the magnitude and direction of the electric field $\vec{E}$ that will balance the weight of an electron? The mass m of an electron is 9.11×10^{-31} kg, and the magnitude of an electron charge is $|e| = 1.6 \times 10^{-19}$ C.

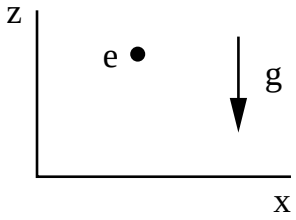

Answer: To balance the downward force of gravity, the force $\vec{F}_E = q\vec{E}$ from the electric field $\vec{E}$ must be upward. Since the electron is negatively charged, $\vec{F}_E = q\vec{E} = -e\vec{E}$, and $\vec{E}$ points downward. Balancing the magnitude of the gravitational force and the electric force gives

$$\begin{aligned} \vec{F}_{tot} &= \vec{F}_E + \vec{F}_g = 0 \\ \vec{F}_g &= -\vec{F}_E \\ mg &= eE \\ E &= \frac{mg}{e} \\ &= \frac{(9.11 \times 10^{-31}\ \text{kg})\,(9.8\ \text{m/s}^2)}{1.6 \times 10^{-19}\ \text{C}} \\ &= 5.58 \times 10^{-11}\ \text{V/m} \end{aligned}$$

direction of $E = -\hat{z} = -\hat{i}$	$\lvert E\rvert = 5.58 \times 10^{-11}$ V/m

WORK OUT PROBLEMS

4. (15 points) Find the force $\vec{F}$ on an infinite solenoid carrying current $I = 10$ A. The solenoid is a coil with $n = 10^5$ turns per meter and a radius $r = 6$ cm.

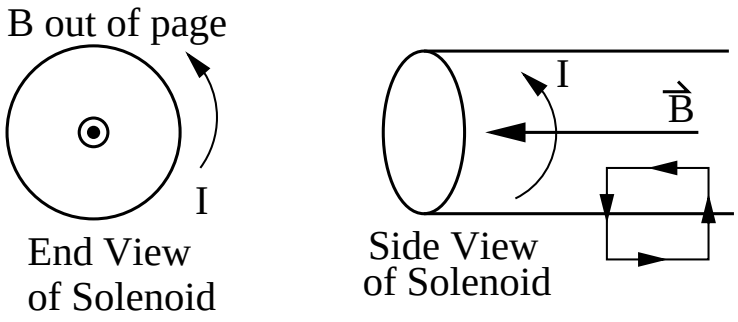

Answer: First we need to understand where the force comes from. The coil carries current I that generates a magnetic field $\vec{B}$ perpendicular to the current. This magnetic field exerts a force on the current given by $\vec{F} = I\vec{\ell} \times \vec{B}$.

The field produced by an infinite solenoid is parallel to the axis of the solenoid. The direction is given by the right hand rule where the fingers of your right hand curl in the direction of the current and your thumb points in the direction of the field. The magnitude is $B = \mu_o n I$. You can derive this using Ampere's Law. Draw a square Amperian loop as shown. Only the side of the Amperian loop inside the coil contributes.

$$\begin{aligned} \oint \vec{B} \cdot d\vec{s} &= \mu_0 I_{\text{enc}} \\ B\ell &= \mu_0 n I \ell \\ B &= \mu_o n I \end{aligned}$$

Now use $\vec{F} = I\vec{\ell} \times \vec{B}$ to find the force. From the right hand rule, the force will be radially outward in the $\hat{r}$ direction. To find the magnitude of the force:

$$\begin{aligned} \vec{F} &= I\vec{\ell} \times \vec{B} \\ F &= I(2\pi r)(\mu_o n I) \\ &= 2\pi r \mu_o n I^2 \hat{r} \\ &= 2\pi(0.06 \text{ m}) \left(4\pi \times 10^{-7} \text{ Tm/A}\right) (10^5 \text{ m}^{-1})(100 \text{ A}^2) \\ &= 4.74 \text{ N} \end{aligned}$$

direction of $\vec{F} = \hat{r}$= radially outward

magnitude of $F = 4.74$ N

5. (15 points) A circular loop of wire encloses an area of $A = 9$ cm^2 and lies in the y-z plane. The resistance of the wire is $R = 10\ \Omega$. Initially no current flows in the wire and there is no external magnetic field. At time $t = 0$ an external magnetic $\vec{B}$ is turned on and increases with time at a constant rate of $dB/dt = 10^3$ T/sec. What is the current I induced in the wire loop? What is the magnitude and direction of the induced magnetic dipole moment $\vec{\mu}$? Show your work.

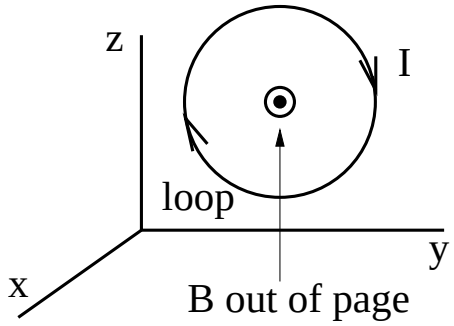

Answer: From Faraday's Law, the emf $\mathcal{E}$ around the ring is generated by the changing magnetic flux $\Phi = \int \vec{B} \cdot d\vec{a} = BA$.

$$\begin{aligned} \mathcal{E} &= -\frac{d\Phi}{dt} \\ &= -\frac{d}{dt}(BA) \\ &= -A\frac{dB}{dt} \end{aligned}$$

From Ohm's Law, the current is given by $I = |\mathcal{E}|/R$.

$$\begin{aligned} I &= \frac{|\mathcal{E}|}{R} \\ &= \frac{A}{R}\frac{dB}{dt} \\ &= \frac{(9\text{ cm}^2)}{10\ \Omega}\left(\frac{1\text{ m}^2}{10^4\text{ cm}^2}\right)\left(10^3\text{ T/s}\right) \\ &= 9 \times 10^{-2}\text{ A} \end{aligned}$$

The direction of the current is given by Lenz' law which says that the current flows in the direction to oppose the change in current. Since the external field is increasing out of the page, the current flows clockwise to generate magnetic field pointing into the page. The direction of the magnetic moment $\vec{\mu}$ is given by the right hand rule where the fingers of your right hand curl in the direction of the current and your thumb points in the direction of $\vec{\mu}$.

$$\begin{aligned} \vec{\mu} &= IA(-\hat{x}) \\ &= \left(9 \times 10^{-2}\text{ A}\right)\left(9 \times 10^{-4}\text{ m}^2\right)(-\hat{x}) \\ &= 8.1 \times 10^{-5}\text{ Am}^2\ (-\hat{x}) \end{aligned}$$

$I = 9 \times 10^{-2}$ A

Direction of $\vec{\mu} = -\hat{x} = -\hat{i}$

Magnitude of $\mu = 8.1 \times 10^{-5}$ Am^2

6. (15 points) What is the charge Q_1 on capacitor C_1 in the circuit shown in the figure? In the circuit shown $C_1 = 3$ μF, $C_2 = 6$ μF, $R_1 = 4000$ Ω, and $R_2 = 7000$ Ω. The power delivered to R_2 is 2.4 W. The circuit has been connected for a long time and carries a constant current I.

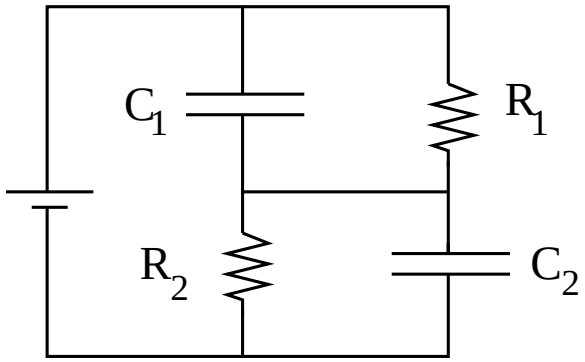

Answer: We can rearrange the circuit to look like this:

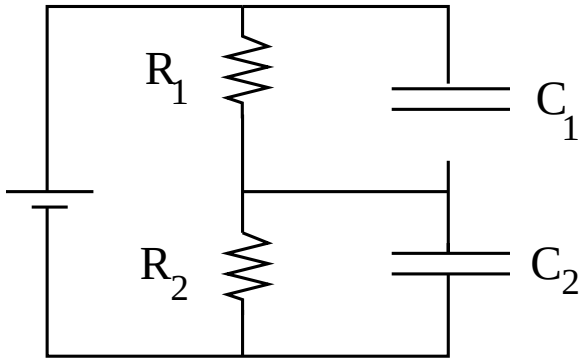

The strategy is to use $P_2 = I^2 R_2$ to find I. Then use Ohm's law to find the voltage drop V_1 across R_1: $V_1 = IR_1$. Then we can find the charge Q_1 on C_1 using $Q_1 = C_1 V_1$.

To find the current I, we note that the power dissipated in R_2 is

$$\begin{aligned} P_2 &= I^2 R_2 \\ I &= \sqrt{\frac{P_2}{R_2}} \end{aligned}$$

The voltage drop V_1 across R_1 is given by

$$\begin{aligned} V_1 &= IR_1 \\ &= \sqrt{\frac{P_2}{R_2}} R_1 \end{aligned}$$

The charge Q_1 on C_1 is given by

$$\begin{aligned} Q_1 &= C_1 V_1 \\ &= C_1 \sqrt{\frac{P_2}{R_2}} R_1 \end{aligned}$$

$$
\begin{aligned}
&= \left(3 \times 10^{-6}\ \mathrm{F}\right) \sqrt{\frac{2.4\ \mathrm{W}}{7000\ \Omega}} (4000\ \Omega) \\
&= 2.22 \times 10^{-4}\ \mathrm{C} \\
&= 222 \mu \mathrm{C}
\end{aligned}
$$

$Q_1 = 222\ \mu\mathrm{C}$

7. (15 points) A gas is taken quasistatically through the cyclic process described by the figure. Find the net amount of heat Q absorbed by the system during one complete cycle. Note that 1 Pa = 1 N/m^2.

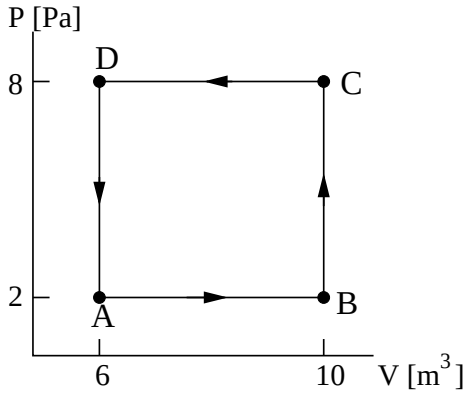

Answer: After one complete cycle, there is no change in internal energy E_{int}. So from the first law of thermodynamics

$$\begin{aligned} \Delta E_{int} &= 0 = Q + W \\ Q &= -W \end{aligned}$$

where W is the work done *on* the system. The work is minus the area of the box:

$$\begin{aligned} W &= -\int P dV \\ Q &= -W \\ &= \int P dV \\ &= P_{CD}\,(V_D - V_C) + P_{AB}\,(V_B - V_A) \\ &= (8\text{ Pa})(6-10)\text{ m}^3 + (2\text{ Pa})(10-6)\text{ m}^3 \\ &= -32\text{ Pa}\cdot\text{m}^3 + 8\text{ Pa}\cdot\text{m}^3 \\ &= -24\text{ J} \end{aligned}$$

where we used the fact that 1 Pa·m^3 = 1 Joule.

$Q = -24$ J